computar

# T6Z5710MSP-CS

**6X 5.7mm - 34.2mm F1.0**
**for 1/3 type Cameras, Motorized Zoom**
**CS-Mount**

**with Spot Filter and Preset**

1/3 type

| | | | | | | | |
|---|---|---|---|---|---|---|---|
| Model No. | | T6Z5710MSP-CS | | Effective Lens Aperture | Front | ∅41.0mm | |
| Focal Length | | 5.7mm - 34.2mm | | | Rear | ∅10.2mm | |
| Max. Aperture Ratio | | 1:1.0 | | Back Focal Length | | 8.5mm | |
| Max. Image Format | | 4.8mm x 3.6mm(∅6mm) | | Flange Back Length | | 12.5mm | |
| Operation Range | Iris | F1.0 - F360C | | Mount | | CS-Mount | |
| | Focus | 1.2m - Inf. | | Filter Size | | M49 P=0.75mm | |
| | Zoom | 5.7mm - 34.2mm | | Tripod Screw | | 1/4 - 20UNC | |
| Control | Iris | Motorized | | Dimensions | | W68.5mm x H76.3mm x D82.5mm | |
| | Focus | Motorized, Preset | | Weight | | 470g | |
| | Zoom | Motorized, Preset | | | | | |
| Object Dimension at M.O.D. | 5.7mm | 101.6cm x 75.2cm | | | | | |
| | 34.2mm | 17cm x 13cm | | | | | |
| Angle of View | D | 1/3 type | 56.5° - 10.0° | 1/4 type | 43.2° - 7.8° | | |
| | H | | 45.9° - 8.1° | | 34.8° - 6.2° | | |
| | V | | 34.8° - 6.2° | | 26.2° - 4.8° | | |
| | | Iris | | Focus | | Zoom | |
| Supply Voltage | | DC8V | | DC8V | | DC8V | |
| Current | | 25mA or less | | 25mA or less | | 25mA or less | |
| Response Time | | Approx. 2 sec. | | Approx. 3.5 sec. | | Approx. 4 sec. | |
| Preset Potentiometer | | — | | 5kΩVR | | 5kΩVR | |
| Operating Temperature | | −10°C - +50°C | | | | | |

M.O.D. : Minimum Object Distance

CS

## Dimensions

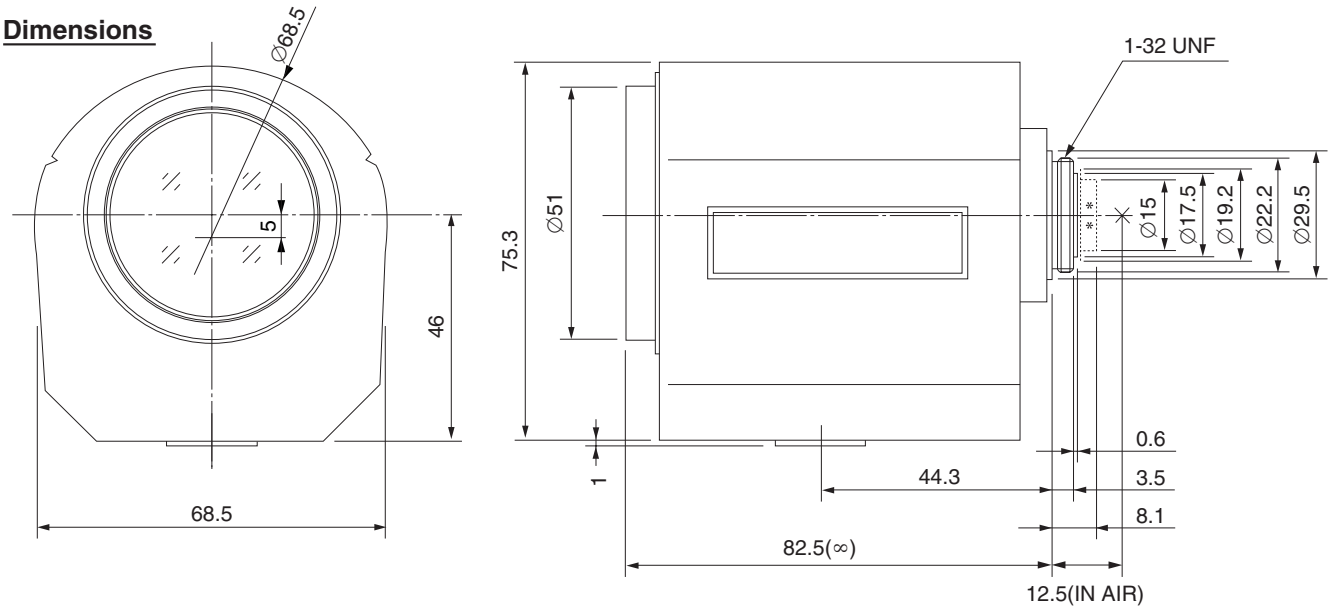


## Wiring Diagram

**PRESET POTENTIOMETER**

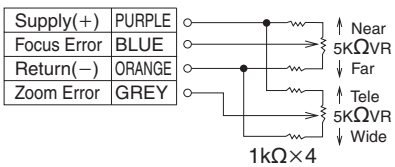


**IRIS**

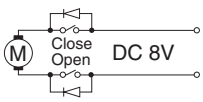


| | Open | Close |
|---|---|---|
| WHITE | + | − |
| BROWN | − | + |

**FOCUS**

| | Near | Far |
|---|---|---|
| GREEN | + | − |
| BLACK | − | + |

**ZOOM**

| | Tele | Wide |
|---|---|---|
| YELLOW | + | − |
| RED | − | + |

**∗∗ : for B/W camera**

Using with a B/W camera, please use the attached "B/W aberration compensation filter" and "FB compensation spacer". The filter(M20 P=0.5mm) should be screwed onto the lens from rear side and the spacer should be placed between lens and camera.