computar

T2616FICS-4

2.6mm F1.6
for 1/3 type Cameras, Fixed-focal Manual Iris
CS-Mount

1/3 type

Model No.		T2616FICS-4		Effective Lens Aperture	Front	∅16.4mm	
Focal Length		2.6mm			Rear	∅8mm	
Max. Aperture Ratio		1:1.6		Back Focal Length		7.5mm	
Max. Image Format		4.8mm x 3.6mm(∅6mm)		Flange Back Length		12.5mm	
Operation Range	Iris	F1.6 - F11C		Mount		CS-Mount	
	Focus	0.3m - Inf.		Filter Size		—	
Control	Iris	Manual		Dimensions		∅34.5mm x 34.7mm	
	Focus	Manual		Weight		45g	
Object Dimension at M.O.D.		71cm x 46.4cm					
Angle of View	D	1/3 type	123.0°	1/4 type	93.8°		
	H		99.6°		75.4°		
	V		75.4°		56.9°		
Operating Temperature		−20°C - +50°C					

M.O.D : Minimum Object Distance

CS
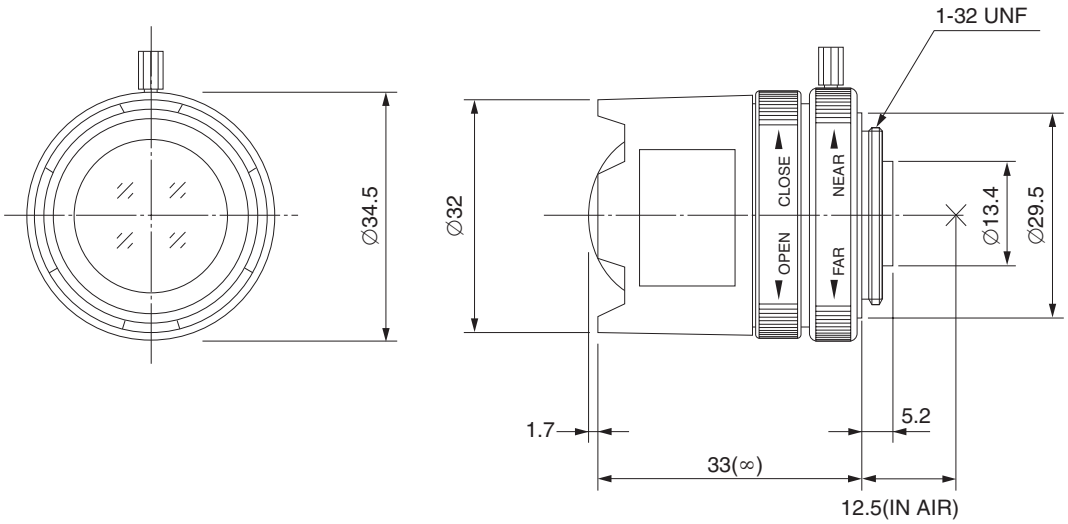
Dimensions